DOC 3 GW

Company	Customer	Date 5/30/2020
Contact	Contact	List price Price on req.
Project	Phone number	Family code
Project no.	Email	Item no. 107540300

Performance according to ISO 9906:2012 – Grade 3B

Power datas referced to:

Water, pure [100%] ; 4°C; 1000kg/m³; 1.57mm²/s

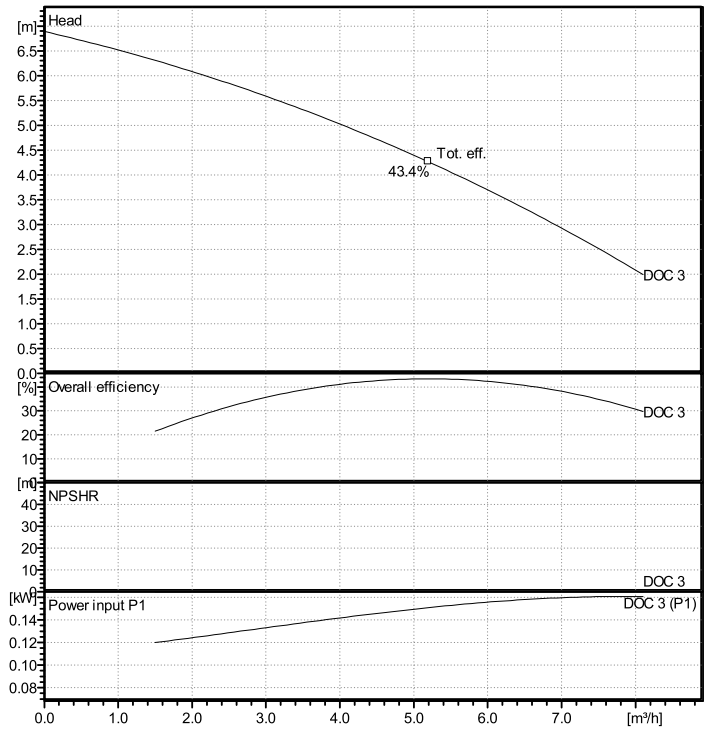

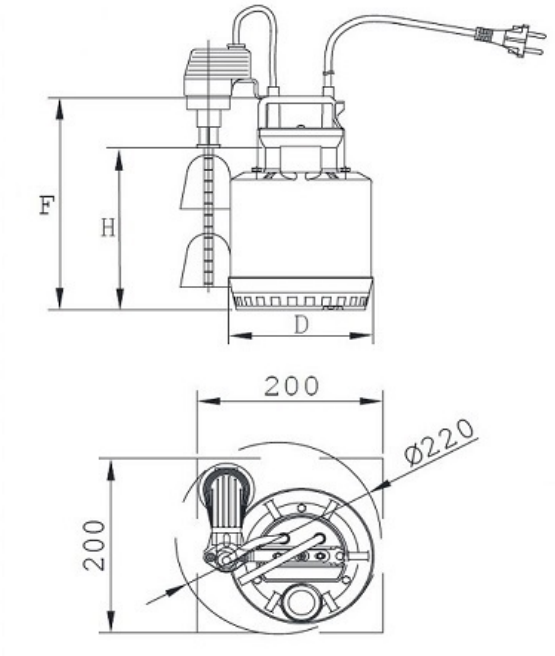

Operating Data Specification

Flow	0 m³/h
Head	0 m

Hydraulic data (duty point)

Flow	
Head	
Power input	

Pump data

Make	Lowara
Type	DOC 3 GW Submersible sump pump
Speed	2900
Head H(Q=0)	6.89 m
Suction side	
Discharge side	
Types of installation	Submersible pump
Weight	4 kg

Materials / seals

Pump body	PPO resin + 20 % GF
Suction strainer	PPO resin + 20 % GF
Impeller	PPO resin + 20 % GF
External case	Stainless steel

Shaft Seal

Motor data

Rated power P2	0.25 kW	Nom. Speed	2700 rpm
Frequency	50	Phase	1~
Rated voltage	230 V	Rated current	1.43 A
Protection class	IP X8	Insulation class	B

Permitted voltage tolerance +/- 10%

Dimensions

mm

D	155		
F	245		
H	188		
X	20		

Note: